Meridian™ Ball Valve

Model #: M21SF

1000 WOG 2-PIECE FULL BORE

FEATURES

- Threaded ends conform to ASME B1.20.1 (NPT)
- Investment casting
- Blow-out proof stem
- 1000 psi (1/4" to 4")
- Carbon filled PTFE seats
- PTFE seal and packing
- Latch lock handle
- Mounting pad
- Pressure tested to API 598

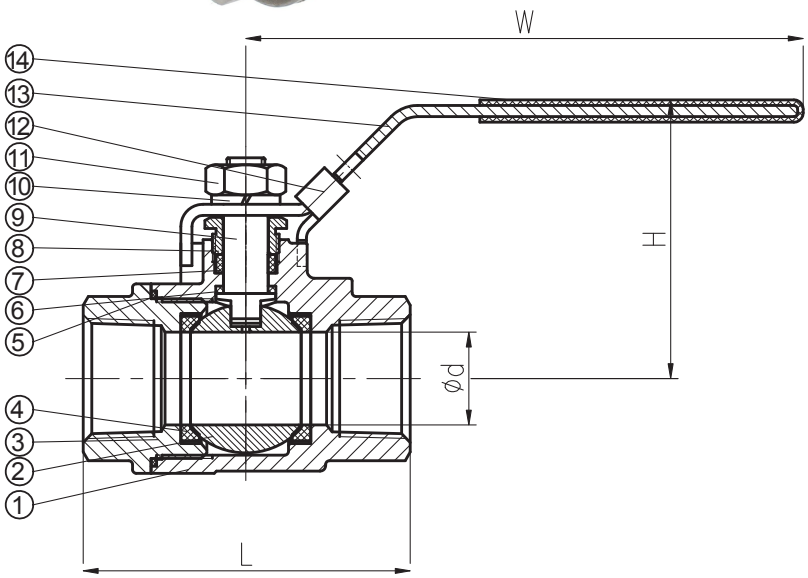

ITEM	PARTS	MATERIAL
01	BODY	ASTM A351 CF8M
02	BALL	ASTM A276 316
03	CAP	ASTM A351 CF8M
04	SEAT	RPTFE
05	JOINT GASKET	PTFE
06	THRUST WASHER	PTFE
07	STEM PACKING	PTFE
08	GLAND BUSH	ASTM A276 304
09	STEM	ASTM A276 316
10	WASHER	ASTM A276 304
11	NUT	ASTM A276 304
12	LOCKING	SS
13	HANDLE	SS
14	HANDLE COVER	PVC

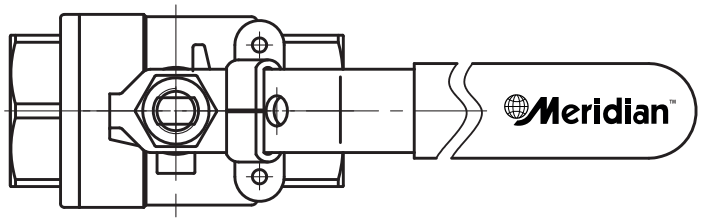

DIMENSIONS

DN	Ød	L	W	H	Weight KG	Cv
8	10.8	53	97	50	0.23	8
10	12.5	53	97	50	0.23	8
15	15	63	100	63	0.35	12
20	20	74	122	67	0.54	35
25	25	86	150	71	0.88	60
32	32	101	150	76	1.34	100
40	38	107	182	90	1.99	150
50	50	123	182	98	2.89	370
65	65	156	250	126	6.5	450
80	80	185	250	140	9.89	825
100	100	228	367	198	19.55	1900

NPS	Ød	L	W	H	Weight LB	Cv
1/4"	0.42	2.09	3.82	1.97	0.51	8
3/8"	0.49	2.09	3.82	1.97	0.51	8
1/2"	0.59	2.48	3.93	2.48	0.77	12
3/4"	0.78	2.91	4.8	2.64	1.19	35
1"	0.98	3.39	5.91	2.8	1.94	60
1-1/4"	1.26	3.98	5.91	2.99	2.95	100
1-1/2"	1.5	4.21	7.17	3.54	4.39	150
2"	1.97	4.84	7.17	3.86	6.37	370
2-1/2"	2.56	6.14	9.85	4.96	14.33	450
3"	3.15	7.28	9.85	5.51	21.80	825
4"	3.94	8.98	14.45	7.68	43.10	1900

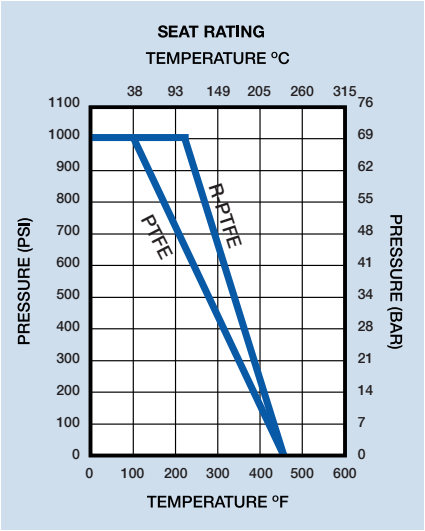

Meridian™ *Trust Through Performance*

DUE TO CONTINUOUS DEVELOPMENT OF OUR PRODUCTS, WE RESERVE THE RIGHT TO MODIFY OUR PRODUCT DESIGN OR CONSTRUCTION WITHOUT PRIOR NOTICE.

DOC 177 08/18